RTD (Pt100) ISOLATED TRANSMITTER

FEATURES

- Accuracy: ± 0.15% R.O.
- Wide input and output range selection
- Steady voltage, current and low ripple output
- Automatically eliminated for wire resistance (3 wires connection)
- Plug-in type

■ MODEL: S4 - TT - R – □ – □ – □

NO.	Input Range	NO.	DC Output Range	Load R.	NO.	Power Supply
A	-100 ~ 100℃	1	0 ~ 1V	≧ 500Ω	1	AC 110V
B	- 50 ~ 100℃	2	0 ~ 5V	≧ 500Ω	2	AC 220V
C	- 50 ~ 50℃	3	0 ~ 10V	≧ 500Ω	3	DC 110V
D	-100 ~ 50℃	4	1 ~ 5V	≧ 500Ω	4	DC 48V
E	- 10 ~ 50℃	5	0 ~ 1mA	≦ 10KΩ	5	DC 24V
F	- 10 ~ 100℃	6	0 ~ 10mA	≦1.5KΩ	0	Option
G	0 ~ 50℃	7	0 ~ 20mA	≦750Ω		
H	0 ~ 100℃	8	4 ~ 20mA	≦750Ω		
I	0 ~ 200℃	0	Option			
J	0 ~ 300℃					
K	0 ~ 400℃					
O	Option					

■ SPECIFICATION

Accuracy	± 0.15% R.O.
Power supply	AC 110 V ± 15% , 50/60HZ AC 220 V ± 15% , 50/60HZ DC 24V,48V,110V ± 10%
Power consumption	AC≦ 5VA,DC≦ 3W
Response time	≦ 400 msec
Output ripple	≦ 0.5% R.O.(peak-peak)
Span adjustment range	≧ ±20% R.O.
Zero adjustment range	≧ ±10% R.O.
Operating temperature rang	0 ~ 60 ℃
Storage temperature rang	-10 ~ 70 ℃
temperature rang coefficient	≦ 150PPM/ ℃
Max. relative humidity	95%
Isolation	Input/Output/Power/Case
Insulation resistance	≧100MΩ, DC 500 V
Dielectric strength	Input/Output/Powe AC1.8KV/minute All terminal/Case AC1.8KV/minute
Impulse withstand test	3KV, 1.2 x 50 μs Common mode & Differential mode

■ DIMENSIONS (UNIT : mm)

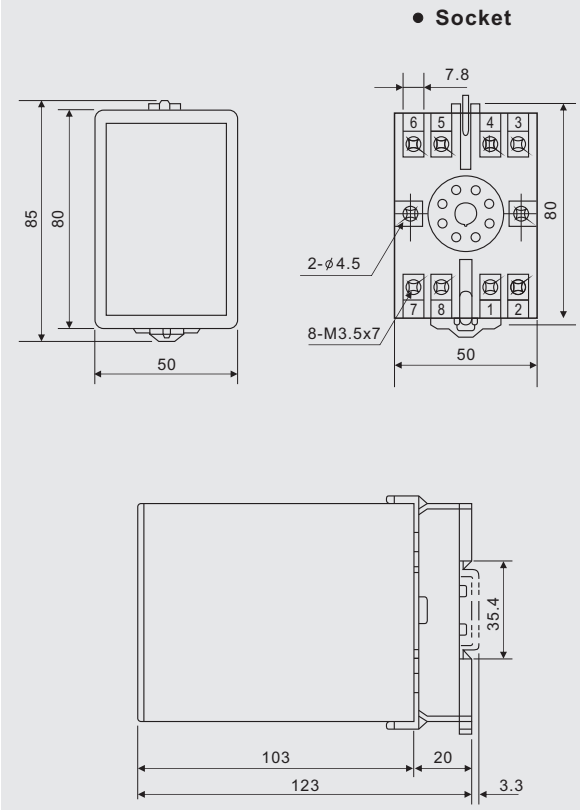
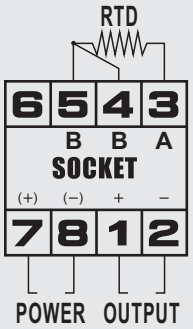
■ CONNECTION DIAGRAM