SIGNAL ISOLATED TRANSMITTER

S4-DT SERIES

FEATURES

- Accuracy: ± 0.1% R.O.
- Wide input and output range selection
- Steady voltage, current and low ripple output
- Plug-in type

■ MODEL: S4 - DT - □ – □ – □

NO.	DC Input Range	NO.	DC Output Range	Load R.	NO.	Power Supply
V1	0 ~ 10mV	10	0 ~ 100mV	≧ 100KΩ	1	AC 110V
V2	0 ~ 100mV	11	0 ~ 1V	≧ 500Ω	2	AC 220V
V3	0 ~ 1V	12	0 ~ 5V	≧ 500Ω	3	DC 110V
V4	0 ~ 5V	13	0 ~ 10V	≧ 500Ω	4	DC 48V
V5	1 ~ 5V	14	1 ~ 5V	≧ 500Ω	5	DC 24V
V6	0 ~ 10V	15	-10 ~ 10V	≧ 5KΩ	0	Option
V7	-10 ~ 10V	16	0 ~ 1mA	≦ 10KΩ		
V8	0 ~ 100V	17	0 ~ 10mA	≦ 1.5KΩ		
A1	0 ~ 1mA	18	0 ~ 20mA	≦ 750Ω		
A2	0 ~ 10mA	19	4 ~ 20mA	≦ 750Ω		
A3	0 ~ 20mA	20	20 ~ 4mA	≦ 750Ω		
A4	4 ~ 20mA	00	Option			
00	Option					

■ SPECIFICATION

Accuracy	± 0.1% R.O.
Power supply	AC 110 V ± 15% , 50/60HZ AC 220 V ± 15% , 50/60HZ DC 24V,48V,110V ± 10%
Power consumption	AC ≦ 5VA,DC ≦ 3W
Input resistance	≧ 100KΩ(mV) ≧ 1MΩ(V) ≦ 50Ω(20mA)
Response time	≦ 400 msec
Output ripple	≦ 0.5% R.O.(peak-peak)
Span adjustment range	≧ ±20% R.O.
Zero adjustment range	≧ ±10% R.O.
Operating temperature rang	0 ~ 60 ºC
Storage temperature rang	-10 ~ 70 ºC
temperature rang coefficient	≦ 150PPM/ ºC
Max. relative humidity	95%
Isolation	Input/Output/Power/Case
Insulation resistance	≧ 100MΩ, DC 500 V
Dielectric strength	Input/Output/Powe AC1.8KV/minute All terminal/Case AC1.8KV/minute
Impulse withstand test	3KV, 1.2 x 50 μs Common mode & Differential mode

■ CONNECTION DIAGRAM

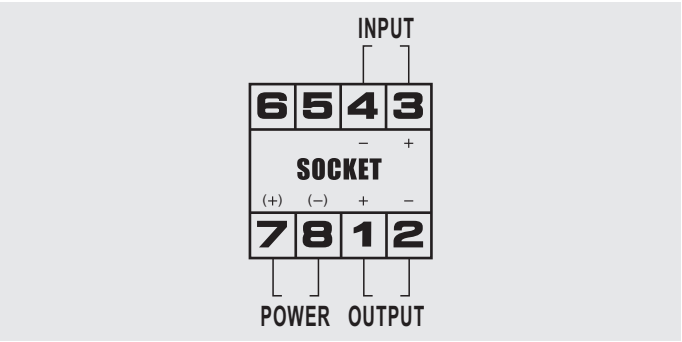
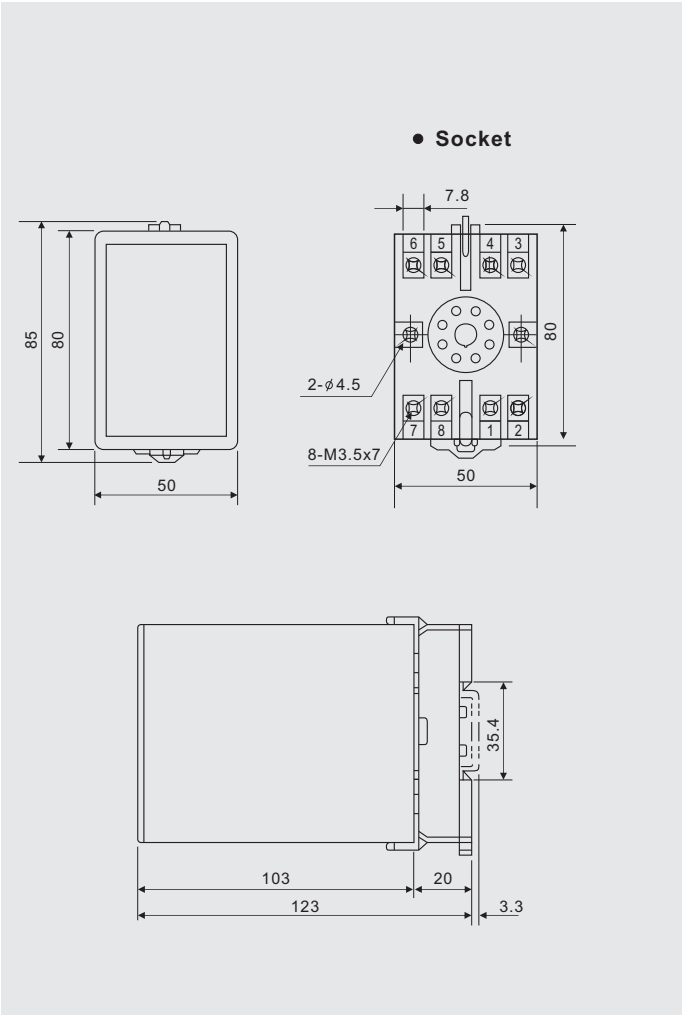
■ DIMENSIONS (UNIT : mm)