FREQUENCY TRANSDUCER

S3-FD

FEATURES

- Accuracy ± 0.025% R.O.
- Self powered
- Excellent long term stability (4 ~ 20mA, 500Ω)
- High impulse & surge protection (5KV)
- The case can be mounted on a 35mm rail which complies with DIN 46277

CE

DESCRIPTION

S3-FD transducer to measure power frequency and provide a DC output directly proportional to the change of input within the specified span. The input signal is shaped to square wave by the wave shapers circuit. The duty cycle of the square wave changes with the frequency of the input signal. Then the square wave is fed into an integrated circuit and the produced DC output is proportional to the input frequency.

SPECIFICATION

• INPUT

Input Range		Input Burden	Max. Input Over capability
Frequency	Voltage		
45 ~ 55HZ	110V ± 20% or 220V ± 20%	≦ 3.5VA	1.2 x rated continuous 2 x rated 10 sec. 4 x rated 2 sec.
55 ~ 65HZ			
45 ~ 65HZ			

• OUTPUT

DC Output Range	Load Resistance	Output Resistance	Output Ripple	Response Time
0 ~ 1V	≧ 1 KΩ	≦ 0.05Ω	≦ 0.5% R.O. (peak)	≦ 400mS. 0 ~ 99%
0 ~ 5V				
1 ~ 5V				
0 ~ 10V				
0 ~ 1mA	≦ 10KΩ	≧ 20MΩ		
0 ~ 10mA	≦ 1 kΩ	≧ 5MΩ		
0 ~ 20mA	≦ 500Ω			
4 ~ 20mA				

Accuracy	± 0.025% Rated of Output
Output load effect	≦ 0.025% R.O.
Magnetic field strength	≦ 0.025% R.O. 400A/M
Span adjustment range	≧ 5% R.O.
Zero adjustment range	≧ 1% R.O.
Operating temperature range	0 ~ 60 °C
Storage temperature range	-10 ~ 70 °C
Temperature coefficient	≦ 100PPM from 0 ~ 60 °C 60PPM ,25 °C ±10 °C
Max. relative humidity	95%
Isolation	Input/output/power/case
Isolation resistance	≧ 100MΩ, DC 500 V
Dielectric withstand voltage	Between input/output/power/case
IEC 60688	AC 2.6 KV,60 HZ,1 minute
Impulse withstand test	5KV, 1.2 x 50 μs
IEC 6100-4-5	Common mode & differential mode
Performance	Designed to comply with IEC 60688

ORDER INFORMATION

S3-FD- [ ] [ ] [ ]

Model

Input Frequency
45: 45 ~ 55HZ
56: 55 ~ 65HZ
46: 45 ~ 65HZ
00: Option

Input Voltage
1: 110V
2: 220V
0: Option

Output Range

V1: 0 ~ 1V	A1: 0 ~ 1mA
V2: 0 ~ 5V	A2: 0 ~ 10mA
V3: 1 ~ 5V	A3: 0 ~ 20mA
V4: 0 ~ 10V	A4: 4 ~ 20mA

00: Option

THE OUTSIDE DIMENSION (UNIT:mm)

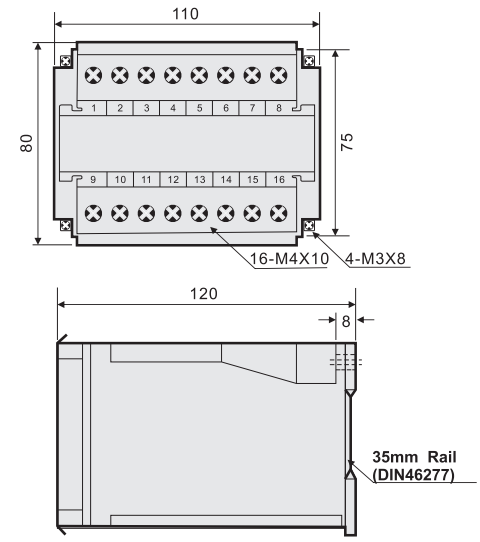

• PANEL MOUNTING HOLES (UNIT:mm)

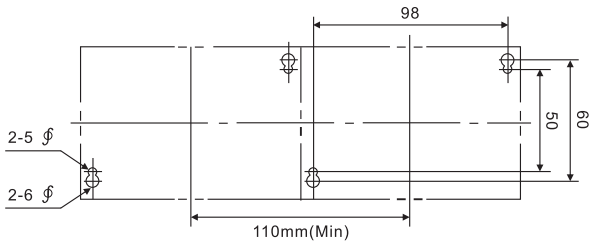
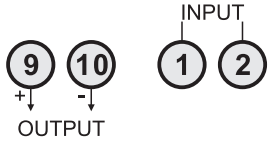
CONNECTION DIAGRAM