MICROPROCESSOR DIGITAL METER

MODEL
S2-412P

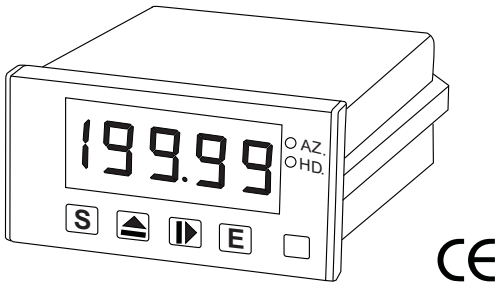

FEATURES

- 4 ½ digits display: ± 19999
- Accuracy : ±0.05% to ±0.25%
- Auto-zero and hold function
- Measuring adjustment in input sensing deviation
- Outside dimension is DIN standard (96x48mm)

SPECIFICATION

• Input

Variable to be Measured	Input Range	Input Impedance	Display Range
DC	0 ~ 5V 1 ~ 5V 0 ~ 10V 0 ~ 1mA 4 ~ 20mA 0 ~ 20mA	≥ 1MΩ ≥ 1MΩ ≥ 1MΩ 100Ω 10Ω 10Ω	0 ~ ±19999 Programmable
AC • TRMS	0 ~ 1A 0 ~ 5A 0 ~ 110V 0 ~ 220V 0 ~ 750V	0.1Ω 0.1Ω ≥ 1MΩ ≥ 1MΩ ≥ 3MΩ	

• Analong Output

Output Range	Load Resistance	Output Resistance	Output Ripple
1 ~ 5V	≥ 1KΩ	≤ 0.05Ω	≤ 0.5% R.O. (Peak)
0 ~ 10V			
0 ~ 1mA	0 ~ 10KΩ	≥ 20MΩ	
0 ~ 20mA	0 ~ 500Ω	≥ 5MΩ	
4 ~ 20mA			

• Communication

Interface ..... RS 485
Protocol ..... MODBUS, RTU
Baud rate ..... 1200 ~ 38400
Address range ..... 1 ~ 255
Data format N81, N82, O81, E81

• General

Display ..... 14.2mm(0.56")H, red LED
Accuracy ..... DC range ≤±0.05% F.S. ±2 digits
AC range ≤±0.15% F.S. ±2 digits
Output ≤±0.1% ~ ±0.25% R.O.
(Option: Depending on actual measuring)
Sampling time ..... Abt. 0.8 sec. Typically
Frequency range ..... 45 ~ 70HZ for AC range
Over indication ..... Flash " OFL " or " -OFL "
Over input signal ..... Flash display
Aux. power source ..... AC/DC 85 ~ 265V, DC 20 ~ 60V
Power consumption ..... ≤AC 8.5VA ≤DC 5W
Sensor power supple ..... DC 24V, 30mA
Operating temperature range ..... 0 ~ 60℃
Storage temperature range ..... -10 ~ 70℃
Temperature coefficient ..... ≤ 100PPM/℃
≤ 60PPM, 25℃±10℃
Max. relative humidity 95%
Dielectric strength (IEC 60688) ..... AC 2KV/1 minute
Input/output/power terminals
AC 3KV/1 minute
All terminals to case

• Electromagnetic compatibility

Electrostatic discharge ..... IEC 61000-4-2
Electromagnetic fields immunity ..... IEC 61000-4-3
Electrical transient in burst ..... IEC 61000-4-4
Withstanding impulse voltage ..... IEC 61000-4-5
Immunity to voltage dips ..... IEC 61000-4-11

OUTSIDE DIMENSION (UNIT:mm)

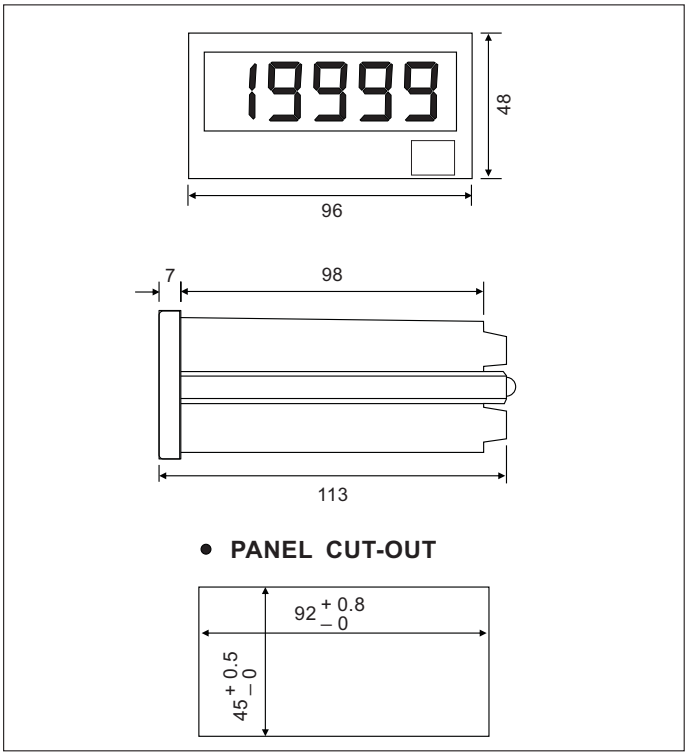

CONNECTION DIAGRAM

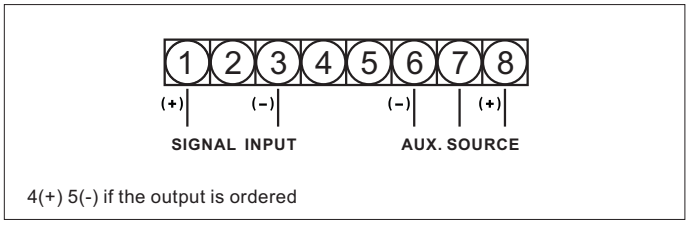

ORDERING INFORMATION

S2-412P- □□□□□

Input	Measuring Range		Output	Aux. Source	Option
D: DC A: AC T: TRMS R: Pt100 K: K TYPE 0: Option	P1: 0 ~ 50mV P2: 0 ~ 60mV P3: 0 ~ 5V P4: 1 ~ 5V P5: 0 ~ 10V P6: 0 ~ 1mA P7: 4 ~ 20mA P8: 0 ~ 20mA	A7: 0 ~ 1A A8: 0 ~ 5A V6: 0 ~ 110V V7: 0 ~ 220V T1: 0 ~ 400℃ T2: 0 ~ 1200℃ 00: Option	V2 : 1~5V V4 : 0~10V A2 : 0~1mA A3 : 0~20mA A4 : 4~20mA RS: RS 485 NO: None 00 : Option	1: AC/DC 85 ~ 265V 2: DC 20V ~ 60V 0: Option	H: Data hold D: Exciting DC 24V N: None